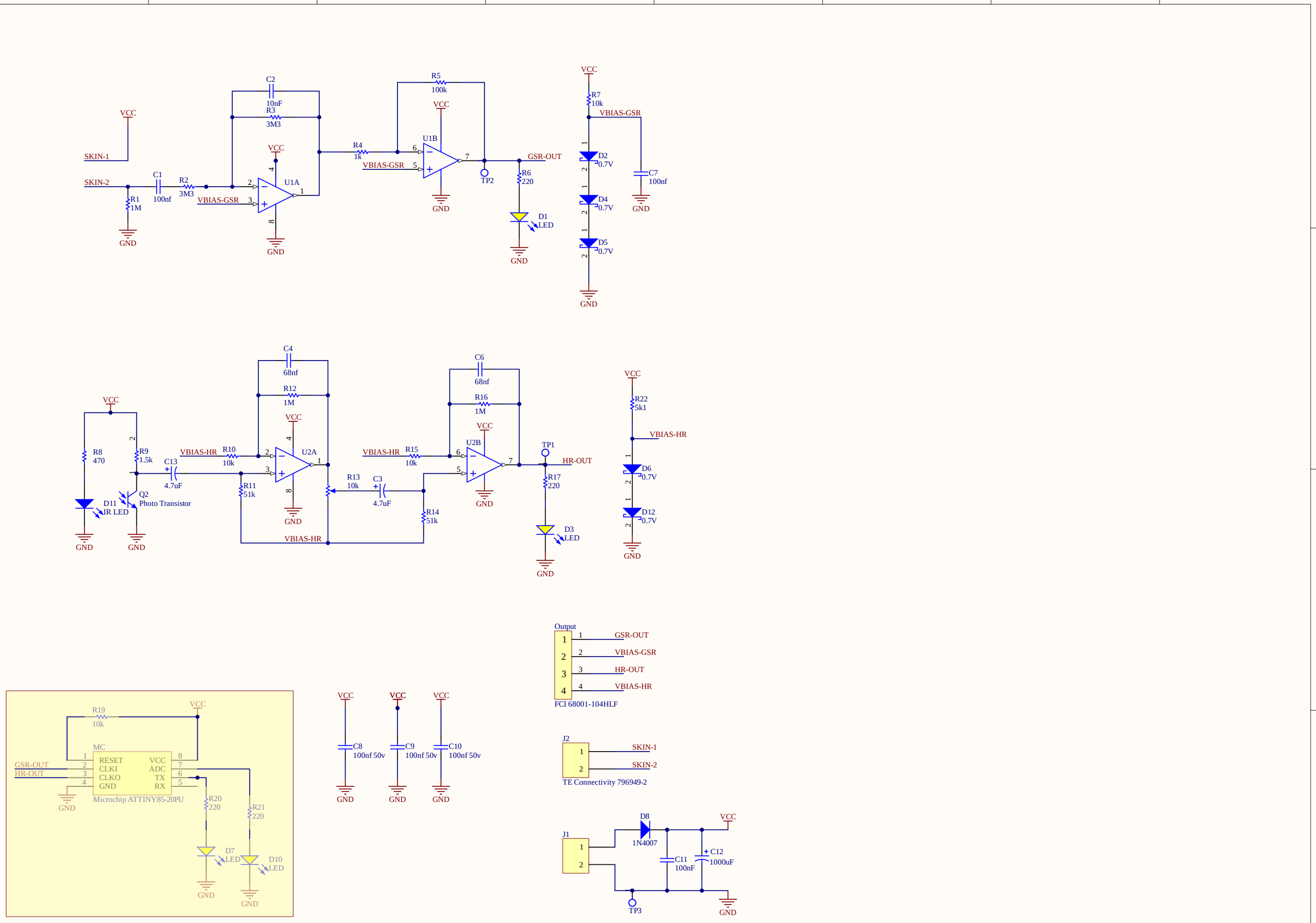
VCC
SKIN-1
SKIN-2
C1
100nf
R1
1M
GND
R2
3M3
VBIAS-GSR
C2
10nF
R3
3M3
U1A
R4
1k
R5
100k
U1B
TP2
GSR-OUT
R6
220
D1
LED
R7
10k
D2
0.7V
D4
0.7V
D5
0.7V
C7
100nf
C4
68nf
R12
1M
R8
470
R9
1.5k
C13
4.7uF
Q2
Photo Transistor
D11
IR LED
R10
10k
U2A
R11
51k
R13
10k
C3
4.7uF
R14
51k
C6
68nf
R16
1M
U2B
R15
10k
TP1
HR-OUT
R17
220
D3
LED
R22
5k1
D6
0.7V
D12
0.7V
Output
FCI 68001-104HLF
J2
TE Connectivity 796949-2
MC
Microchip ATTINY85-20PU
RESET
CLKI
CLKO
GND
VCC
ADC
TX
RX
R19
10k
R20
220
R21
220
D7
LED
D10
LED
C8
100nf 50v
C9
100nf 50v
C10
100nf 50v
J1
D8
1N4007
C11
100nF
C12
1000uF
TP3